COMAL COUNTY

ENGINEER'S OFFICE

License to Operate On-Site Sewage Treatment and Disposal Facility

Issued This Date: **10/21/2019** Permit Number: **109637**

Location Description: 6833 CHIMNEY ROCK
CANYON LAKE, TX 78133

Subdivision: Emerald Valley
Unit:
Lot: 59B
Block:
Acreage:

Type of System: Aerobic
Surface Irrigation

Issued to: Edward Dupont

This license is authorization for the owner to operate and maintain a private facility at the location described in accordance to the rules and regulations for on-site sewerage facilities of Comal County, Texas, and the Texas Commission on Environmental Quality.

The license grants permission to operate the facility. It does not guarantee successful operation. It is the responsibility of the owner to maintain and operate the facility in a satisfactory manner.

Alterations to this permit including, but not limited to:

- Increase in the square feet of living area
- Increase in the number of bedrooms
- A change of use (i.e. residential to commercial)
- Relocation of system components (including the relocation of spray heads)
- Installation of landscaping
- Adding new structures to the system

may require a new permit. **It is the responsibility of the owner to apply for a new permit, if applicable.**

Inspection and licensing of a facility indicates only that the facility meets certain minimum requirements. It does not impede any governmental entity in taking the proper steps to prevent or control pollution, to abate nuisance, or to protect the public health.

This license to operate is valid for an indefinite period. The holder may transfer it to a succeeding owner, provided the facility has not been remodeled and is functioning properly.

Licensing Authority

Comal County Environmental Health

James F Comeaux OS0032485

ENVIRONMENTAL HEALTH INSPECTOR

Sandra Ann Hernandez, Asst

ENVIRONMENTAL HEALTH COORDINATOR

OS 0025599

Comal County Environmental Health
OSSF Inspection Sheet

Installer Name: COUNTRYSIDE OSSF Installer #: 0500002929

1st Inspection Date: 10-15-19 2nd Inspection Date: 3rd Inspection Date: 10-21-19 final

Inspector Name: CONNOR Inspector Name: Inspector Name: Connor

Permit#: 109637 Address: EMERALD VALLEY - 6833 CHIMNEY ROCK

No.	Description	Answer	Citations	Notes	1st Insp.	2nd Insp.	3rd Insp.
1	SITE AND SOIL CONDITIONS & SETBACK DISTANCES Site and Soil Conditions Consistent with Submitted Planning Materials	✓	285.31(a) 285.30(b)(1)(A)(iv) 285.30(b)(1)(A)(v) 285.30(b)(1)(A)(iii) 285.30(b)(1)(A)(ii) 285.30(b)(1)(A)(i)		✓		
2	SITE AND SOIL CONDITIONS & SETBACK DISTANCES Setback Distances Meet Minimum Standards	✓	285.91(10) 285.30(b)(4) 285.31(d)		✓		
3	SEWER PIPE Proper Type Pipe from Structure to Disposal System (Cast Iron, Ductile Iron, Sch. 40, SDR 26)	✓	285.32(a)(1)		✓		
4	SEWER PIPE Slope from the Sewer to the Tank at least 1/8 Inch Per Foot	✓	285.32(a)(3)		✓		
5	SEWER PIPE Two Way Sanitary - Type Cleanout Properly Installed (Add. C/O Every 100' &/or 90 degree bends)	✓	285.32(a)(5)		✓		
6	PRETREATMENT Installed (if required) TCEQ Approved List PRETREATMENT Septic Tank(s) Meet Minimum Requirements		285.32(b)(1)(G)285.32(b)(1)(E)(iii) 285.32(b)(1)(E)(iv) 285.32(b)(1)(F) 285.32(b)(1)(B) 285.32(b)(1)(C)(i) 285.32(b)(1)(C)(ii) 285.32(b)(1)(D) 285.32(b)(1)(E) 285.32(b)(1)(A) 285.32(b)(1)(E)(ii)(II) 285.32(b)(1)(E)(i) 285.32(b)(1)(E)(ii)(I)				
7	PRETREATMENT Grease Interceptors if required for commercial		285.34(d)				

TANK SET LEVEL NO LEAKS OPERATIONAL COVER ALL

10-21-19 - JC Covered

Comal County Environmental Health
OSSF Inspection Sheet

Final

No.	Description	Answer	Citations	Notes	1st Insp.	2nd Insp.	3rd Insp.
40	APPLICATION AREA Distribution Pipe, Fitting, Sprinkler Heads & Valve Covers Color Coded Purple?	✓	285.33(d)(2)(G)(iii)(II)285.33(d)(2)(G)(iii)(III)285.33(d)(2)(G)(v) 285.33(d)(2)(G)(iii) 285.33(d)(2)(G)(iv) 285.33(d)(2)(G)(I) 285.33(d)(2)(G)(II) 285.33(d)(2)(G)(iii)(I)		✓		✓
41	APPLICATION AREA Low Angle Nozzles Used / Pressure is as required APPLICATION AREA Acceptable Area, nothing within 10 ft of sprinkler heads? APPLICATION AREA The Landscape Plan is as Designed	✓ ✓ ✓	285.33(d)(2)(G)(I) 285.33(d)(2)(A) 285.33(d)(2)(F)		✓		✓
42	APPLICATION AREA Area Installed	✓		PER PLAN	✓		
43	PUMP TANK Meets Minimum Reserve Capacity Requirements						
44	PUMP TANK Material Type & Manufacturer						
45	PUMP TANK Type/Size of Pump Installed						

Comal County Environmental Health
OSSF Inspection Sheet

Installer Name: COUNTRYSIDE OSSF Installer #: 05000 2929

1st Inspection Date: 10-15-19 2nd Inspection Date: 3rd Inspection Date:

Inspector Name: CONNOR Inspector Name: Inspector Name:

Permit#: 109637 Address: EMERALD VALLEY - 6833 CHIMNEY ROCK

No.	Description	Anwser	Citations	Notes	1st Insp.	2nd Insp.	3rd Insp.
1	SITE AND SOIL CONDITIONS & SETBACK DISTANCES Site and Soil Conditions Consistent with Submitted Planning Materials	✓	285.31(a) 285.30(b)(1)(A)(iv) 285.30(b)(1)(A)(v) 285.30(b)(1)(A)(iii) 285.30(b)(1)(A)(ii) 285.30(b)(1)(A)(i)		✓		
2	SITE AND SOIL CONDITIONS & SETBACK DISTANCES Setback Distances Meet Minimum Standards	✓	285.91(10) 285.30(b)(4) 285.31(d)		✓		
3	SEWER PIPE Proper Type Pipe from Structure to Disposal System (Cast Iron, Ductile Iron, Sch. 40, SDR 26)	✓	285.32(a)(1)		✓		
4	SEWER PIPE Slope from the Sewer to the Tank at least 1/8 Inch Per Foot	✓	285.32(a)(3)		✓		
5	SEWER PIPE Two Way Sanitary - Type Cleanout Properly Installed (Add. C/O Every 100' &/or 90 degree bends)	✓	285.32(a)(5)		✓		
6	PRETREATMENT Installed (if required) TCEQ Approved List PRETREATMENT Septic Tank(s) Meet Minimum Requirements		285.32(b)(1)(G)285.32(b)(1)(E)(iii) 285.32(b)(1)(E)(iv) 285.32(b)(1)(F) 285.32(b)(1)(B) 285.32(b)(1)(C)(i) 285.32(b)(1)(C)(ii) 285.32(b)(1)(D) 285.32(b)(1)(E) 285.32(b)(1)(A) 285.32(b)(1)(E)(ii)(II) 285.32(b)(1)(E)(i) 285.32(b)(1)(E)(ii)(I)				
7	PRETREATMENT Grease Interceptors if required for commercial		285.34(d)				

TANK SET LEVEL NO LEAKS OPERATIONAL COVER ALL

Comal County Environmental Health
OSSF Inspection Sheet

No.	Description	Anwser	Citations	Notes	1st Insp.	2nd Insp.	3rd Insp.
8	SEPTIC TANK Tank(s) Clearly Marked SEPTIC TANK If SingleTank, 2 Compartments Provided with Baffle SEPTIC TANK Inlet Flowline Greater than 3" and " T " Provided on Inlet and Outlet SEPTIC TANK Septic Tank(s) Meet Minimum Requirements		285.32(b)(1)(E) 285.91(2) 285.32(b)(1)(F) 285.32(b)(1)(E)(iii) 285.32(b)(1)(E)(ii)(II) 285.32(b)(1)(E)(ii)(I) 285.32(b)(1)(E)(i) 285.32(b)(1)(D) 285.32(b)(1)(C)(ii) 285.32(b)(1)(C)(i) 285.32(b)(1)(B) 285.32(b)(1)(A) 285.32(b)(1)(E)(iv)				
9	ALL TANKS Installed on 4" Sand Cushion/ Proper Backfill Used	✓	285.32(b)(1)(F) 285.32(b)(1)(G) 285.34(b)		✓		
10	SEPTIC TANK Inspection / Clean Out Port & Risers Provided on Tanks Buried Greater than 12" Sealed and Capped		285.38(d)				
11	SEPTIC TANK Secondary restraint system provided SEPTIC TANK Riser permanently fastened to lid or cast into tank SEPTIC TANK Riser cap protected against unauthorized intrusions		285.38(d) 285.38(e)				
12	SEPTIC TANK Tank Volume Installed						
13	PUMP TANK Volume Installed						
14	AEROBIC TREATMENT UNIT Size Installed	✓			✓		
15	AEROBIC TREATMENT UNIT Manufacturer AEROBIC TREATMENT UNIT Model Number	✓		TEX AIR 600 PT 792	✓		
16	DISPOSAL SYSTEM Absorptive		285.33(a)(4) 285.33(a)(1) 285.33(a)(2) 285.33(a)(3)				
17	DISPOSAL SYSTEM Leaching Chamber		285.33(a)(1) 285.33(a)(3) 285.33(a)(4) 285.33(a)(2)				
18	DISPOSAL SYSTEM Evapo-transpirative		285.33(a)(3) 285.33(a)(4) 285.33(a)(1) 285.33(a)(2)				

Comal County Environmental Health
OSSF Inspection Sheet

No.	Description	Anwser	Citations	Notes	1st Insp.	2nd Insp.	3rd Insp.
19	DISPOSAL SYSTEM Drip Irrigation		285.33(c)(3)(A)-(F)				
20	DISPOSAL SYSTEM Soil Substitution		285.33(d)(4)				
21	DISPOSAL SYSTEM Pumped Effluent		285.33(a)(3) 285.33(a)(1) 285.33(a)(2)				
22	DISPOSAL SYSTEM Gravelless Pipe		285.33(a)(3) 285.33(a)(2) 285.33(a)(4) 285.33(a)(1)				
23	DISPOSAL SYSTEM Mound		285.33(a)(3) 285.33(a)(1) 285.33(a)(2) 285.33(a)(4)				
24	DISPOSAL SYSTEM Other (describe) (Approved Design)	✓	285.33(d)(6) 285.33(c)(4)	AEROBIC SPRAY	✓		
25	DRAINFIELD Absorptive Drainline 3" PVC or 4" PVC						
26	DRAINFIELD Area Installed						
27	DRAINFIELD Level to within 1 inch per 25 feet and within 3 inches over entire excavation		285.33(b)(1)(A)(v)				
28	DRAINFIELD Excavation Width DRAINFIELD Excavation Depth DRAINFIELD Excavation Separation DRAINFIELD Depth of Porous Media DRAINFIELD Type of Porous Media						
29	DRAINFIELD Pipe and Gravel - Geotextile Fabric in Place		285.33(b)(1)(E)				
30	DRAINFIELD Leaching Chambers DRAINFIELD Chambers - Open End Plates w/Splash Plate, Inspection Port & Closed End Plates in Place (per manufacturers spec.)		285.33(c)(2)				
31	LOW PRESSURE DISPOSAL SYSTEM Adequate Trench Length & Width, and Adequate Separation Distance between Trenches		285.33(d)(1)(C)(i)				

Comal County Environmental Health
OSSF Inspection Sheet

No.	Description	Anwser	Citations	Notes	1st Insp.	2nd Insp.	3rd Insp.
32	EFFLUENT DISPOSAL SYSTEM Utilized Only by Single Family Dwelling EFFLUENT DISPOSAL SYSTEM Topographic Slopes < 2.0% EFFLUENT DISPOSAL SYSTEM Adequate Length of Drain Field (1000 Linear ft. for 2 bedrooms or Less & an additional 400 ft. for each additional bedroom) EFFLUENT DISPOSAL SYSTEM Lateral Depth of 18 inches to 3 ft. & Vertical Separation of 1ft on bottom and 2 ft. to restrictive horizon and ground water respectfully EFFLUENT DISPOSAL SYSTEM Lateral Drain Pipe (1.25 - 1.5" dia.) & Pipe Holes (3/16 - 1/4" dia. Hole Size) 5 ft. Apart		285.33(b)(3)(A) 285.33(b)(3)(A) 285.33(b)(3)(B) 285.91(13) 285.33(b)(3)(D) 285.33(b)(3)(F)				
33	AEROBIC TREATMENT UNIT Is Aerobic Unit Installed According to Approved Guidelines.	✓	285.32(c)(1)		✓		
34	AEROBIC TREATMENT UNIT Inspection/Clean Out Port & Risers Provided AEROBIC TREATMENT UNIT Secondary restraint system provided AEROBIC TREATMENT UNIT Riser permanently fastened to lid or cast into tank AEROBIC TREATMENT UNIT Riser cap protected against unauthorized intrusions	✓ ✓ ✓ ✓			✓ ✓ ✓ ✓		
35	AEROBIC TREATMENT UNIT Chlorinator Properly Installed with Chlorine Tablets in Place.						
36	PUMP TANK Is the Pump Tank an approved concrete tank or other acceptable materials & construction PUMP TANK Sampling Port Provided in the Treated Effluent Line PUMP TANK Check Valve and/or Anti- Siphon Device Present When Required PUMP TANK Audible and Visual High Water Alarm Installed on Separate Circuit From Pump						
37	PUMP TANK Inspection/Clean Out Port & Risers Provided PUMP TANK Secondary restraint system provided PUMP TANK Riser permanently fastened to lid or cast into tank PUMP TANK Riser cap protected against unauthorized intrusions						
38	PUMP TANK Secondary restraint system provided						
39	PUMP TANK Electrical Connections in Approved Junction Boxes / Wiring Buried	✓			✓		

Comal County Environmental Health
OSSF Inspection Sheet

No.	Description	Anwser	Citations	Notes	1st Insp.	2nd Insp.	3rd Insp.
40	APPLICATION AREA Distribution Pipe, Fitting, Sprinkler Heads & Valve Covers Color Coded Purple?	✓	285.33(d)(2)(G)(iii)(II)285.33(d)(2)(G)(iii)(III)285.33(d)(2)(G)(v) 285.33(d)(2)(G)(iii) 285.33(d)(2)(G)(iv) 285.33(d)(2)(G)(i) 285.33(d)(2)(G)(ii) 285.33(d)(2)(G)(iii)(I)		✓		
41	APPLICATION AREA Low Angle Nozzles Used / Pressure is as required APPLICATION AREA Acceptable Area, nothing within 10 ft of sprinkler heads? APPLICATION AREA The Landscape Plan is as Designed	✓ ✓	285.33(d)(2)(G)(i) 285.33(d)(2)(A) 285.33(d)(2)(F)		✓		
42	APPLICATION AREA Area Installed	✓		PER PLAN	✓		
43	PUMP TANK Meets Minimum Reserve Capacity Requirements						
44	PUMP TANK Material Type & Manufacturer						
45	PUMP TANK Type/Size of Pump Installed						

COMAL COUNTY

ENGINEER'S OFFICE

Permit of Authorization to Construct an On-Site Sewage Facility
Permit Valid For One Year From Date Issued

Permit Number: 109637

Issued This Date: 10/01/2019

This permit is hereby given to: Edward Dupont

To start construction of a private, on-site sewage facility located at:

6833 CHIMNEY ROCK
CANYON LAKE, TX 78133

Subdivision: Emerald Valley
Unit:
Lot: 59B
Block:
Acreage:

APPROVED MINIMUM SIZES AS PER ATTACHED DESIGN

Type of System: Aerobic
Surface Irrigation

This permit gives permission for the construction of the above referenced on-site facility to commence. Installation must be completed by an installer holding a valid registration card from the Texas Commission on Environmental Quality (TCEQ). Installation and inspection must comply with current TCEQ and Comal County requirements.

Call (830) 608-2090 to schedule inspections.

REVISED
8:08 am, Sep 19, 2019

* * * COMAL COUNTY OFFICE OF ENVIRONMENTAL HEALTH * * *

APPLICATION FOR PERMIT FOR AUTHORIZATION TO CONSTRUCT AN ON-SITE SEWAGE FACILITY AND LICENSE TO OPERATE

Date _____ Permit # 109637

Owner Name Ed Dupont
Mailing Address 2203 Post oak Court
City, State, Zip S.A. Tx 78248
Phone # 210-413-8965
Email _____

Agent Name Hoyt Residential
Agent Address _____
City, State, Zip _____
Phone # _____
Email hoyt@gvtc.com

All correspondence should be sent to: ☑ Owner ☐ Agent ☐ Both Method: ☑ Mail ☑ Email

Subdivision Name Emerald Valley Unit _____ Lot 59 B Block _____
Acreage/Legal _____
Street Name/Address 6833 Chimney Rock City Cannon Lake Tx Zip 78133

Type of Development:

☑ Single Family Residential
Type of Construction (House, Mobile, RV, Etc.) House Mobile Home.
Number of Bedrooms 3
Indicate Sq Ft of Living Area 2440

RECEIVED
AUG 29 2019
COUNTY ENGINEER

☐ Non-Single Family Residential
(Planning materials must show adequate land area for doubling the required land needed for treatment units and disposal area)
Type of Facility _____
Offices, Factories, Churches, Schools, Parks, Etc. - Indicate Number Of Occupants _____
Restaurants, Lounges, Theaters - Indicate Number of Seats _____
Hotel, Motel, Hospital, Nursing Home - Indicate Number of Beds _____
Travel Trailer/RV Parks - Indicate Number of Spaces _____
Miscellaneous _____

Estimated Cost of Construction: $_____ (Structure Only)

Is any portion of the proposed OSSF located in the United States Army Corps of Engineers (USACE) flowage easement?
☐ Yes ☒ No (If yes, owner must provide approval from USACE for proposed OSSF improvements within the USACE flowage easement)

Source of Water ☑ Public ☐ Private Well

Are Water Saving Devices Being Utilized Within the Residence? ☑ Yes ☐ No

By signing this application, I certify that:
- The completed application and all additional information submitted does not contain any false information and does not conceal any material facts.
- Authorization is hereby given to the permitting authority and designated agents to enter upon the above described property for the purpose of site/soil evaluation and inspection of private sewage facilities..
- I understand that a permit of authorization to construct will not be issued until the Floodplain Administrator has performed the reviews required by the Comal County Flood Damage Prevention Order.
- I affirmatively consent to the online posting/public release of my e-mail address associated with this permit application, as applicable.

Ed Dupont
Signature of Owner

8-29-19
Date

195 David Jonas Dr., New Braunfels, Texas 78132-3760 (830) 608-2090 Fax (830) 608-2078

109637

* * * COMAL COUNTY OFFICE OF ENVIRONMENTAL HEALTH * * *

APPLICATION FOR PERMIT FOR AUTHORIZATION TO CONSTRUCT AN ON-SITE SEWAGE FACILITY AND LICENSE TO OPERATE

Planning Materials & Site Evaluation as Required Completed By Hoyt Seidenstricker

System Description Aerobic with Spray Distribution

Size of Septic System Required Based on Planning Materials & Soil Evaluation

Tank Size(s) (Gallons) 600 GPD Unit Absorption/Application Area (Sq Ft) 3925

Gallons Per Day (As Per TCEQ Table III) 240

(Sites generating more than 5000 gallons per day are required to obtain a permit through TCEQ.)

RECEIVED

AUG 29 2019

COUNTY ENGINEER

Is the property located over the Edwards Recharge Zone? ☐ Yes ☑ No

(If yes, the planning materials must be completed by a Registered Sanitarian (R.S.) or Professional Engineer (P.E.))

Is there an existing TCEQ approved WPAP for the property? ☐ Yes ☐ No

(If yes, the R.S. or P.E. shall certify that the OSSF design complies with all provisions of the existing WPAP.)

If there is no existing WPAP, does the proposed development activity require a TCEQ approved WPAP? ☐ Yes ☐ No

(If yes, the R.S. or P.E. shall certify that the OSSF design will comply with all provisions of the proposed WPAP. A Permit to Construct will not be issued for the proposed OSSF until the proposed WPAP has been approved by the appropriate regional office.)

Is the property located over the Edwards Contributing Zone? ☑ Yes ☐ No

Is there an existing TCEQ approval CZP for the property? ☑ Yes ☐ No

(If yes, the P.E. or R.S. shall certify that the OSSF design complies with all provisions of the existing CZP.)

If there is no existing CZP, does the proposed development activity require a TCEQ approved CZP? ☐ Yes ☐ No

(If yes, the R.S. or P.E. shall certify that the OSSF design will comply with all provisions of the proposed CZP. A Permit to Construct will not be issued for the proposed OSSF until the CZP has been approved by the appropriate regional office.)

Is this property within an incorporated city? ☐ Yes ☑ No

If yes, indicate the city: _____

By signing this application, I certify that:

- The information provided above is true and correct to the best of my knowledge.
- I affirmatively consent to the online posting/public release of my e-mail address associated with this permit application, as applicable.

Hoyt Seidenstricker

Signature of Designer

8-6-19

Date

195 David Jonas Dr., New Braunfels, Texas 78132-3760 (830) 608-2090 Fax (830) 608-2078

201906030362 08/28/2019 02:07:31 PM 1/1

RECEIVED

Affidavit to the Public

AUG 29 2019

COUNTY ENGINEER

THE COUNTY OF COMAL
STATE OF TEXAS

CERTIFICATION OF OSSF REQUIRING MAINTENANCE

Before me, the undersigned authority, on this day personally appeared EDWARD DUPONT who, after being, by me, duly sworn, upon oath states that he/she is the owner of record of that certain tract or parcel of land lying and being situated in COMAL County, Texas and being more particularly described as follows:

Legal Description of property is as follows:

EMERALD VALLEY LOT 59B

An OSSF requiring a maintenance contract, according to 30 Texas Administrative Code §285.91(12) will be installed on the property.

The Texas Health and Safety Code, Chapter 366 authorizes the Texas Commission on Environmental Quality (commission) to regulate on-site sewage facilities (OSSFs). Additionally, the Texas Water Code (TWC), § 5.012 and § 5.013, gives the commission primary responsibility for implementing the laws of the State of Texas relating to water and adopting rules necessary to carry out its powers and duties under the TWC. The commission, under the authority of the TWC and the Texas Health and Safety Code, requires owners to provide notice to the public that certain types of OSSFs are located on specific pieces of property. To achieve this notice, the commission requires a recorded affidavit. Additionally, the owner must provide proof of the recording to the OSSF permitting authority. This recorded affidavit is not a representation or warranty by the commission of the suitability of this OSSF, nor does it constitute any guarantee by the commission that the appropriate OSSF was installed.

This OSSF must be covered by a continuous service policy for the first two years. After the initial two-year service policy, the owner of an aerobic treatment system for a single-family residence shall either obtain a maintenance contract within 30 days or maintain the system personally.

Upon sale or transfer of the above-described property, the permit for the OSSF shall be transferred to the buyer or new owner. A copy of the planning materials for the OSSF may be obtained from (_____).

Signed by my/our hand(s) on this 21 Day of AUGUST, 2019

Signature Edward Dupont

Print Name EDWARD DUPONT

Sworn to and subscribed to before Notary Public, in and for the state of Texas and

WITNESS MY HAND AND OFFICIAL SEAL THIS THE 21st DAY OF August, 2019.

Kimber Maughan
Notary Public, State of Texas
My Commission Expires: 5/15/2022

KIMBER MAUGHAN
Notary Public
STATE OF TEXAS
My Comm. Exp. 05/15/2022
ID# 131568169

Filed and Recorded
Official Public Records
Bobbie Koepp, County Clerk
Comal County, Texas
08/28/2019 02:07:31 PM
CASHFOUR 1 Page(s)
201906030362

Bobbie Koepp

REVISED
9:17 am, Oct 01, 2019

Countryside Construction, Inc.

300 Chapman Parkway, Canyon Lake, TX. 78133
Phone: 830-899-2615 or 1-888-379-3721 Fax: 830-899-6662

Septic System Service Agreement

In consideration of payment for this service contract, we will abide by and agree to its terms and conditions:

Name: Ed Dupont **Address:** 6833 Chimney Rock
Sub-Div./County: Emerald Valley Comal **City, State-Zip:** Canyon Lake, Tx 78133
Permit #: _____ **Model #:** _____ **Serial #:** _____

(X) Initial Two Year Service Agreement & Two Year Limited Warranty ( ) One Year Service Agreement

The effective date of this initial maintenance contract shall be the date the License to Operate is issued.

This contract will be in effect **FROM** LTO **TO** _____ and will provide the following:

A: An inspection/service call every (4) four months which will include: inspection, adjustments and servicing of the mechanical & electrical components as necessary to insure proper function of the system.
B: An effluent quality inspection consisting of a visual check for color, turbidity, scum, overflow and odor.
C: **The property owner is responsible for "purchasing and keeping chlorine"** in the chlorinator, (if applicable). If the chlorine test reveals "No Chlorine" in the system, the property owner may incur an additional cost.
D: If any improper operation is observed (which cannot be corrected at that time) the property owner will be notified immediately of the conditions and the estimated cost.
E: The response time to a complaint by the property owner regarding operation of the system, shall be within "48 hours," from the time of notification.
F: **ANY PARTS, WARRANTY OR NON-WARRANTY, OR FREIGHT CHARGES, LABOR OR SERVICE CALLS DUE NOT PAID FOR REMAIN THE PROPERTY OF COUNTRYSIDE CONSTRUCTION AND COULD RESULT IN REPOSSION OF PARTS BY COUNTRYSIDE CONSTRUCTION.**
G: **THE SIGNING OF THIS SERVICE AGREEMENT AUTHORIZESCOUNTRYSIDE CONSTRUCITON TO ENTER THE PROPERTY TO EXECUTE ALL TERMS OF THIS CONTRACT.**

Countryside Construction, Inc., **will warranty installation** of the septic system to be according to state and county regulations and the designs approved by the county. **HOMEOWNER WILL BE RESPONSIBLE FOR SERVICE CALLS, LABOR AND SHIPPING COSTS ON ANY "WARRANTED PARTS" EXCHANGED DURING WARRANTY.** All other components will be according to manufacture's warranties.

Important: As Countryside Construction, Inc. **cannot control what or how much effluent** goes into this septic system, we **cannot warranty** how the system will function. Refer to manufacturers or installer's instructions, for suggestions on septic operation. This service agreement **does not** cover the cost of **"Service Calls, Labor or Materials** that are required or **parts out of warranty,** the failure to maintain electrical power to the system, **sprinklers that are broken,** leaking, stopped-up or otherwise mal-functioning; or sewage flows exceeding the hydraulic/organic design capabilities and the input of non-biodegradable materials (solvents, grease, oil, paints, etc.), or any usage contrary to the requirements as advised by authorized service representative. Laboratory test work is available at an additional cost. Chlorine, filters, or parts that are out of warranty are available at a reasonable cost.

This contract **does not** include the **pumping of a tank** or of any **compartment of a tank, or settlement of soil on or around any part of the system regardless of reason:**

Violations of the warranty also include: Disconnecting the alarm, restricting ventilation to the aerator, over loading the system above its rated capacity; or flooding by external means. Rodent, insect or Fire Ant damage or any other form of unusual abuse is a violation.

Texas Commission on Environmental Quality requires a service contract to **be in effect for 2 years.** A renewal service contract **should be "Activated" (30) thirty days before expiration** of existing contract. We will contact property owner prior to expiration of existing contract.

Serviced by: *Countryside Construction Inc.*
Walker Chapman - Operator Licensee #2929

(X) Ed Dupont Print Name (X) Ed Dupont Date: 9-15-19
Property Owner Signature

(X) Walker Chapman Date: 9-15-19 Authorized Service Representative *(revised 11/19/07)*

COMAL COUNTY
ON-SITE SEWERAGE FACILITY Soil Evaluation Report Information

Date Soil Survey Performed: 8/1/2019

Site Location: 6833 Chimney Rock

Name of Site Evaluator: Hoyt Seidensticker Registration Number: OS0008771

Proposed Excavation Depth: n/a County: Comal

RECEIVED
AUG 29 2019
COUNTY ENGINEER

Requirements:

At least two soil excavations must be performed on the site, at opposite ends of the proposed disposal area.

Location of soil boring or dug pits must be shown on the site drawing.

For subsurface disposal, soil evaluation must be performed to a depth of at least two feet below the proposed excavation depth. For surface disposal, the surface horizon must be evaluated.

Describe each soil horizon and identify any restrictive feature on the form. Indicate depths where features appear.

Soil Boring Number 1

Depth (feet)	Texture Class	Soil Structure	Gravel Analysis	Drainage (Redox Features/ Water Table)	Restrictive Horizon	Observations (color, consistence)
0	III	Clay loam	<30%	none		Black
1	III	Clay loam	<30%			Cream
2 22 in		rock			yes, rock	
3						
4						
5						

Soil Boring Number 2

Depth (feet)	Texture Class	Soil Structure	Gravel Analysis	Drainage (Redox Features/ Water Table)	Restrictive Horizon	Observations (color, consistence)
0	III	Clay loam	<30%	none		Black
1	III	Clay loam	<30%			Cream
2 22 in		rock			yes, rock	
3						
4						
5						

Features of Site Area

Presence of 100 year flood zone	Yes ____	No x
Presence of adjacent ponds, streams, water improvements	Yes ____	No x
Existing or proposed water well in nearby area	Yes ____	No x
Organized sewage service available to lot or tract	Yes ____	No x
Recharge feature within 150 feet	Yes ____	No x

By my signature, I herby certify that the information provided in this report is based on my site observations and are accurate to the best of my ability.

I understand that any misrepresentation of the information contained in this report my be grounds to revoke or suspend my license. The site evaluation determined the site is suitable for a spray Distribution disposal system with Aerobic treatment

According to table XIII, the site is suitable for this proposed system. A copy of Tables IX and XIII have been given to the property owner to inform them of other alternatives based upon the result of this site evaluation

Signature of Site Evaluator

8-17-19
Date

REVISED
8:09 am, Sep 19, 2019

Comal COUNTY
ON-SITE SEWERAGE FACILITY Site Evaluation Report Information

Date: 8/17/2019

Applicant Information:

Name: Ed Dupont
Address: 2203 Postoak Court
City: SA State: Texas Zip 78248
Phone: 210-413-8965

Site Evaluator Information:

Name: Hoyt Seidensticker
license OS0008771 expires 8/31/2020
Company: Land Stewardship Services, LLC
Address: 27115 Bent Trail
City: Boerne State: Texas Zip: 78006
Phone: (210) 414-6603 Fax:

Property Location:

Lot: 598 Block: Sub.: Emarald Valley
Street/Road Address: 6833 Chimney Road
City: Canyon Lake State: Texas Zip: 78133
Unincorporated Area? Y or N y
Additional information

Installer information:

Name: Steve Gilliam OS0004356
Company:
Address: P.O. Box 1419
City: Castroville State: Texas Zip: 78009
Phone: (2010) 559-7329 Fax:

Schematic of Lot or Tract

Show:

Compass North, adjacent streets, property lines, property lines, property dimensions, location of buildings, easements, water lines, and other surface improvements where known (drainage, patios, sidewalks).
Location of existing or proposed water wells within 150 feet of property.
Indicate slope or show contour lines from the structure to the farthest location of the proposed soil absorption or irrigation area.
Location of soil borings or dug pits (show location with respect to a known reference point).
Location of natural, constructed, or proposed drainage ways, (streams, ponds, lakes, rivers, high tide of salt water bodies) water impoundments areas, cut or fill bank, sharp slopes and breaks.

SITE DRAWING Lot Size: _____ acres

SEE ATTACHED

RECEIVED
AUG 29 2019
COUNTY ENGINEER

Signature of Site Evaluator Hoyt Seidensticker Site Evaluator License No: OS0008771

9/19/2019
6:01 AM
Aerobic with Spray Distribution System

ON-SITE SEWAGE FACILITY DESIGN CRITERIA

Ed Dupont

REVISED
8:09 am, Sep 19, 2019

Property Information:

St. Address: 6833 Chimney Rock
City: Canyon Lake State: Texas
Zip code: 78133

Predicted Quantity of Sewage (Q)

Water Saving Devises in Home (y/n): yes
Gallons/day (Q): 240
Greywater included (yes/no): yes

Rate of Adsorption (Ra)

Application rate (g/sq. ft): 0.064
Minimum Adsorptive Area (sq. ft.): 3750

Aerobic Unit

Required size of aerobic unit: 360 gpd
Pretreatment Tank (gallons): 400
Class 1 Aerobic Unit:: TexAir 600 S PT792
Pump tank total capacity (gal): 792
Chlorination: Liquid installed in Tank
Pump Switch operation: Float system
Dosing cycle quantity (gals): Varied
Cycling time: night time
Pump size and capacity: Schaefer E-Series 20 GPM

House Information

No. of Bedrooms: 3
Sq. footage (Approx.): 2440
Water Supply: CLWS

Supply Line from House

Length of supply line (approx. ft): 30
Type of supply line: SCH 40 PVC
Size of Supply line (in): 3 or 4

Supply Line For Spray Irrigation System

Length of supply line (approx. ft): 85
Type of supply line: SCH 40 PVC
Size of supply line (in): 1

Disposal Area per this System

$\pi (25)^2$ = 1962.5
$\pi (25)^2$ = 1962.5
=
=
=
minus overlap
Total irrigated area (sq. ft.): 3925

All design criteria is in accordance with TCEQ, Title 30, TAC Chapter 285, Subchapter D, On-Site Sewage Facilities (Effective December 26, 2012). The above design was based on the best available information and should function properly under normal operating conditions. All changes or modifications made to design must be approved by the below signed designer.

Hoyt Seidensticker, R.S. No. 3588

8-19-19
Date

STATE OF TEXAS
HOYT SEIDENSTICKER
3588
REGISTERED SANITARIAN

Land Stewardship Services, LLC, 27115 Bent Trail, Boerne, Texas 78006
Cell (210) 414-6603,

Effective Immediately: If any change(s) are made that require a revision to this design, a $150.00 fee will be assessed. This includes, but not limited to, change(s) in the house size, number of bedrooms, location of house or one type of system to another.

8/17/2019
9:55 PM
Aerobic with Spray
Distribution System

ON-SITE SEWAGE FACILITY DESIGN CRITERIA

Ed Dupont

RECEIVED
AUG 29 2019
COUNTY ENGINEER

Head Pressure

Elevation Head:	4
Pressure Head:	92
Friction Head:	3.4
Total head:	99.4

Sprinkler Head Information

K-Rain sprinkler head PROPLUS, low angle nozzle

No. 3 @40psi GPM:	3.1
Number of sprinkler heads:	2
Gallons per minute:	6.2

A class 1 aerobic wastewater treatment unit, chlorination and spray distribution system will be designed for this location. Wastewater from the residence will flow to a pretreatment/trash tank, then to the treatment unit. Treated effluent will be disinfected by chlorination in the pump tank before being disposed of through above ground sprinkler heads. All warning systems shall be installed with the aerobic unit.

Land acceptable for surface application shall have a flat terrain (with less than or equal to 15% slope). Sloped land (with greater than 15% slope) may be acceptable if it is properly landscaped and terraced to minimize runoff. There shall be nothing in the surface application area within ten feet of the sprinkler which would interfere with the uniform application of the effluent.

Areas that rock is exposed must be covered with a suitable amount of material acceptable to the inspecting authority. Areas that are bare or have been disturbed must be seeded or sodded with a mixture of rye and bermuda grasses or other grass species prior to system operation.

A maintenance contract for the entire system must be established at time of installation with someone holding a license to maintain the installed aerobic system.

At every inspection a Total Chlorine Residual test must be conducted and must be a minimum acceptable test of .1 mg/l residual in Pump Tank.

All design criteria is in accordance with TCEQ, Title 30, TAC Chapter 285, Subchapter D, On-Site Sewage Facilities (Effective December 26, 2012). The above design was based on the best available information and should function properly under normal operating conditions. All changes or modifications made to design must be approved by the below signed designer.

Hoyt Seidensticker

8-17-19

Hoyt Seidensticker, R.S. No. 3588 Date
Land Stewardship Services, LLC, 27115 Bent Trail, Boerne, Texas 78006
Cell (210) 414-6603,

REVISED
8:09 am, Sep 19, 2019

Site Map
Aerobic with Spray Distribution System
Ed Dupont
Lot 59B, Emerald Valley
6833 Chimney Rock
Canyon Lake, Texas 78133
Comal County

Scale 1" = 50'

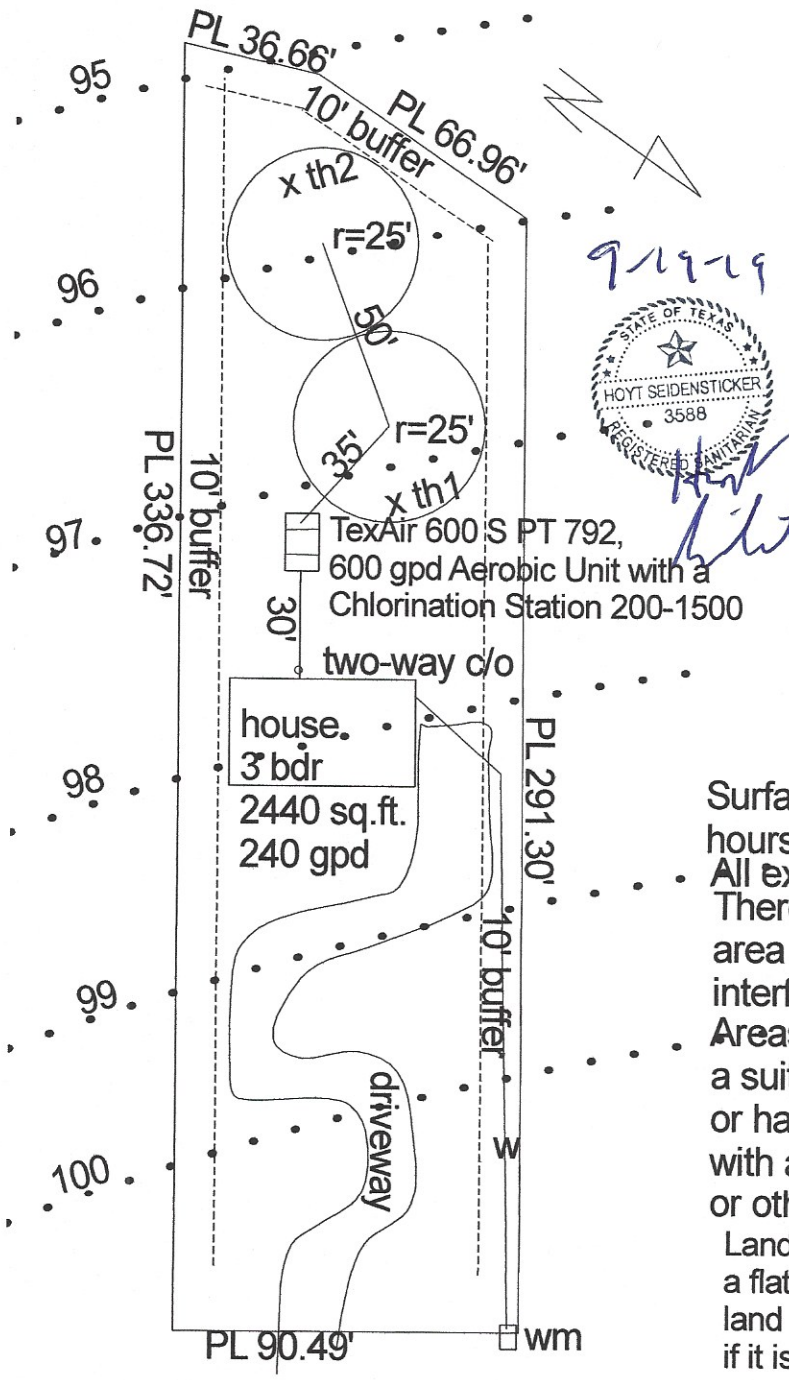

9-19-19

STATE OF TEXAS
HOYT SEIDENSTICKER
3588
REGISTERED SANITARIAN

This design complies with all provisions of the existing Edwards Contributing Zone Plan and their is not a recharge feature within 150' of the proposed septic system.

Risers must be permanently fastened to the tank lid or cast into the tank The connection between the riser and the tank lid must be watertight. Risers must be fitted with removable watertight caps and protected against unauthorized intrusions by either a padlock, a cover that can be removed with specialized tools, a cover having a minimum net weight of 29.5 kilograms (65 pounds) set into a recess of the tank lid, or any other means approved by the executive director.

Surface application should be done between the hours of 12:00 midnight and 5:00 a.m.

All external electrical lines must be in gray conduit

There shall be nothing in the surface application area within ten feet of the sprinkler which would interfere with the uniform application of the effluent

Areas that rock is exposed must be covered with a suitable amount of material. Areas that are bare or have been disturbed must be seeded or sodded with a mixture of rye and bermuda grasses or other grass species prior to system operation.

Land acceptable for surface application shall have a flat terrain (less than to equal to 15% slope). Sloped land (with greater than 15% slope) may be acceptable if it is properly landscaped and terraced to minimize runoff.

Chimney Rock

100 yr flood plain does not exist on this tract

location of sprinkler heads may be adjusted in field to avoid obstacles

I hereby request a variance to the 20 foot setback to property lines as required by Comal County Order to a 10' setback to property lines as required by TCEQ, Chapter 285 and equivalent protection will be maintained by adding a battery backup to the timer clock or photo cell activated timer to assure sprayers to only spray during the predawn hours. In my professional opinion this variance will not pose a threat to the environment or public health.

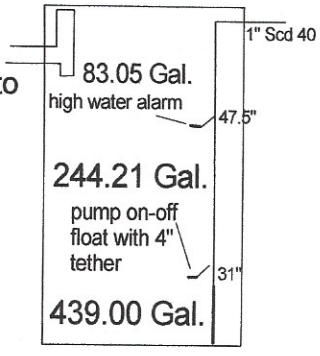

Comal County

OFFICE OF COMAL COUNTY ENGINEER

September 4, 2019

Ed Dupont
2203 Post Oak Court
San Antonio, Texas 78248

Re: Emerald Valley Lot 598, Permit 109637
Application for Permit of Authorization to Construct On-Site Sewage Facility (OSSF) and License to Operate

Dear Mr. Dupont,

We received planning materials for the referenced permit application on August 29, 2019, and found those planning materials to be deficient. In order to continue processing this permit, we need the following information:

1. The permit application and site evaluation report information indicate Lot 598, but the design and the warranty deed are for Lot 59B.
2. The square feet of living area for the residence on the permit application does not match the square feet of living area within the planning materials.
3. The 2 year initial maintenance contract must indicate that the start date of the contract is the date the License to Operate is issued.
4. Revise above as needed and resubmit.

We realize this permit is important to you, in order to help speed up the process the above information may be emailed to rabbjr@co.comal.tx.us. Thank you for your patience and assistance.

Sincerely,

Brenda Ritzen, OS0007722
Environmental Health Coordinator

cc: Hoyt Seidenticker, R.S.

Contract Effective Date:

VOID

Keller ENTERPRISES

Initial _____ **2 year**

From: _____

Permit # _____

To: _____

County _____

RECEIVED

AUG 29 2019

COUNTY ENGINEER

On - Site Sewage Facility
Maintenance Monitoring Contract

1. THIS AGREEMENT is made and entered in on this 23 day of AUGUST, by and between Keller Enterprises, a Texas company and the homeowner.

2. The Client is the owner(s) of a (n) _____ Certified by Adam Keller, on - site sewage disposal unit.

   (MODEL NO. _____ SERIAL NO. _____)

3. At the signing of this contract a _____ per year fee for 2 year/s total of _____ will be due for the following services only. At least once every four (4) months, Keller Enterprises or its authorized representative shall have full and unobstructed access to check for any adjustments needed for the mechanical, electrical, and other applicable component parts to ensure proper function. This includes but not limited to, inspecting control panels, air filters, diffuser operation, and checking the chlorine residual. If access can not be gained due to locked gates, dogs, changed codes or any other reason. A rescheduling fee will be charged. An Inspection report will be filed with the local permitting authority. Any additional work, samples and testing will be billed to the client, and shall be in accordance with Texas Administrative Code Section 285.91(4). We do not pump tanks. **This contract is renewable with both parties consent.** ***Initials*** EAD

4. **The homeowner will be responsible for maintaining the disinfection of the on-site facilities.** ***Initials*** EAD

5. In the event that any component or components of the [illegible] worn or otherwise defective or are broken, or in need of any repair or adjustments whether through the negligence of the Client or otherwise, Keller Enterprises or its authorized Representative shall repair or replace the component or components and restore the system to good working order, on an as needed basis. Any expenses incurred at this time will be billed to the client. No installer warranty, component warranty or Manufacturer warranty is expressed or implied with this Agreement. Broken sprinklers or lines are not a warranty item. Cost of the parts not under warranty by the manufacturer or voided due to the negligence of the Client or otherwise, will be billed to the Client. A fee of $85.00 per hour will be included in the charges. ***Initials*** EAD

VOID

6. **In the event of any failure in the operation of this system, Keller Enterprises will be on call at 830-709-2200, and will respond within 48 hours. Service Call fee is $85.00 per hour. If home owner allows anyone other than Keller Enterprises to look at, work on, fix, change, or replace any component of the aerobic treatment unit or effluent distribution system this contract will be voided without refund. Keller Enterprises will not be liable for any damages due to malfunction of system.** ***Initials*** EAD

7. Prior to expiration of this of Agreement, either party may make termination with 30 days written notice, and upon the expiration of the 30-day time period, this Agreement shall be terminate. No portion of the fee will be refunded. ***Initials*** EAD

8. In case any one or more of the provisions contained in the Agreement shall for any reason be held to be invalid, illegal or unenforceable in any respect, such invalidity, illegality or unenforceability shall not effect any other provision thereof and this Agreement shall be construed as if such invalid, illegal or unenforceable provisions had never been contained herein.
   Initials EAD

9. This Agreement constitutes the sole and only agreement of the parties hereto and supersedes any prior understandings or written or oral agreements between the parties respecting them within the subject matter. ***Initials*** EAD

   In accordance with State Laws and T.C.E.Q. a contract must be in place 30 days prior to current contract expiration date, and someone must check and maintain system. ***Initials*** EAD

Keller Enterprises Inc.
16811 W. FM 2790 S
Lytle, TX 78052
Phone: 830-709-2200

Effective Date of Final Inspection
Steve Gallier

Authorized Representative

Signature: [signature]

EXECUTED AT on the day and year first written above.

Client Name: EDWARD DUPONT

Address: 22

Phone Number: (210) 413-8965

Signature: Edward Dupont
Date

Comal COUNTY

ON-SITE SEWERAGE FACILITY Site Evaluation Report Information

VOID

Date: 8/17/2019

Applicant Information:

Name: Ed Dupont

Address: 2203 Postoak Court

City: SA State: Texas Zip 78248

Phone: 210-413-8965

Site Evaluator Information:

Name: Hoyt Seidensticker

license OS0008771 expires 8/31/2020

Company: Land Stewardship Services, LLC

Address: 27115 Bent Trail

City: Boerne State: Texas Zip: 78006

Phone: (210) 414-6603 Fax:

Property Location:

Lot: 598 Block: Sub.: Emarald Valley

Street/Road Address: 6833 Chimney Road

City: Canyon Lake State: Texas Zip: 78133

Unincorporated Area? Y or N y

Additional information

Installer information:

Name: Steve Gilliam OS0004356

Company:

Address: P.O. Box 1419

City: Castroville State: Texas Zip: 78009

Phone: (2010) 559-7329 Fax:

Schematic of Lot or Tract

Show:

Compass North, adjacent streets, property lines, property lines, property dimensions, location of buildings, easements, water lines, and other surface improvements where known (drainage, patios, sidewalks).
Location of existing or proposed water wells within 150 feet of property.
Indicate slope or show contour lines from the structure to the farthest location of the proposed soil absorption or irrigation area.
Location of soil borings or dug pits (show location with respect to a known reference point).
Location of natural, constructed, or proposed drainage ways, (streams, ponds, lakes, rivers, high tide of salt water bodies) water impoundments areas, cut or fill bank, sharp slopes and breaks.

VOID

SITE DRAWING

Lot Size: acres

SEE ATTACHED

RECEIVED

AUG 29 2019

COUNTY ENGINEER

Signature of Site Evaluator Hoyt Seidensticker Site Evaluator License No: OS0008771

* * * COMAL COUNTY OFFICE OF ENVIRONMENTAL HEALTH * * *

APPLICATION FOR PERMIT FOR AUTHORIZATION TO CONSTRUCT AN ON-SITE SEWAGE FACILITY AND LICENSE TO OPERATE

VOID

Date _____ Permit # 109637

Owner Name Ed Dupont. Agent Name _____

Mailing Address 2203 Post oak Court Agent Address _____

City, State, Zip S.A. Tx 78248 City, State, Zip _____

Phone # 210-413-8965 Phone # _____

Email _____ Email _____

All correspondence should be sent to: ☑ Owner ☐ Agent ☐ Both Method: ☑ Mail ☑ Email

Subdivision Name Emerald Valley Unit _____ Lot 598. Block _____

Acreage/Legal _____

Street Name/Address 6833 Chimney Rock City Cannon Lake Tx Zip 78133

Type of Development:

☑ Single Family Residential

Type of Construction (House, Mobile, RV, Etc.) ~~House~~ Mobile Home.

Number of Bedrooms ~~3~~ 3

Indicate Sq Ft of Living Area 2440

RECEIVED

AUG 29 2019

COUNTY ENGINEER

☐ Non-Single Family Residential

(Planning materials must show adequate land area for doubling the required land needed for treatment units and disposal area)

Type of Facility _____

Offices, Factories, Churches, Schools, Parks, Etc. - Indicate Number Of Occupants _____

Restaurants, Lounges, Theaters - Indicate Number of Seats _____

Hotel, Motel, Hospital, Nursing Home - Indicate Number of Beds _____

Travel Trailer/RV Parks - Indicate Number of Spaces _____

Miscellaneous _____

VOID

Estimated Cost of Construction: $ _____ (Structure Only)

Is any portion of the proposed OSSF located in the United States Army Corps of Engineers (USACE) flowage easement?

☐ Yes ☐ No (If yes, owner must provide approval from USACE for proposed OSSF improvements within the USACE flowage easement)

Source of Water ☑ Public ☐ Private Well

Are Water Saving Devices Being Utilized Within the Residence? ☑ Yes ☐ No

By signing this application, I certify that:

- The completed application and all additional information submitted does not contain any false information and does not conceal any material facts.
- Authorization is hereby given to the permitting authority and designated agents to enter upon the above described property for the purpose of site/soil evaluation and inspection of private sewage facilities..
- I understand that a permit of authorization to construct will not be issued until the Floodplain Administrator has performed the reviews required by the Comal County Flood Damage Prevention Order.
- I affirmatively consent to the online posting/public release of my e-mail address associated with this permit application, as applicable.

Ed Dupont

Signature of Owner

8-29-19.

Date

195 David Jonas Dr., New Braunfels, Texas 78132-3760 (830) 608-2090 Fax (830) 608-2078

Revised April 2019

8/17/2019
9:55 PM
Aerobic with Spray
Distribution System

ON-SITE SEWAGE FACILITY DESIGN CRITERIA

VOID

Ed Dupont

RECEIVED
AUG 29 2019
COUNTY ENGINEER

Property Information:

St. Address: 6833 Chimney Rock
City: Canyon Lake State: Texas
Zip code: 78133

Predicted Quantity of Sewage (Q)

Water Saving Devises in Home (y/n): yes
Gallons/day (Q): 240
Greywater included (yes/no): yes

Rate of Adsorption (Ra)

Application rate (g/sq. ft): 0.064
Minimum Adsorptive Area (sq. ft.): 3750

Aerobic Unit

Required size of aerobic unit: 360 gpd
Pretreatment Tank (gallons): 400
Class 1 Aerobic Unit:: TexAir 600 S PT792
Pump tank total capacity (gal): 792
Chlorination: Liquid installed in Tank
Pump Switch operation: Float system
Dosing cycle quantity (gals): Varied
Cycling time: night time
Pump size and capacity: Schaefer E-Series 20 GPM

VOID

House Information

No. of Bedrooms:
Sq. footage (Approx.): 1440
Water Supply: CLWS

Supply Line from House

Length of supply line (approx. ft): 30
Type of supply line: SCH 40 PVC
Size of Supply line (in): 3 or 4

Supply Line For Spray Irrigation System

Length of supply line (approx. ft): 85
Type of supply line: SCH 40 PVC
Size of supply line (in): 1

Disposal Area per this System

$\pi (25)^2$ = 1962.5
$\pi (25)^2$ = 1962.5
=
=
=
minus overlap
Total irrigated area (sq. ft.): 3925

All design criteria is in accordance with TCEQ, Title 30, TAC Chapter 285, Subchapter D, On-Site Sewage Facilities (Effective December 26, 2012). The above design was based on the best available information and should function properly under normal operating conditions. All changes or modifications made to design must be approved by the below signed designer.

Hoyt Seidensticker, R.S. No. 3588

8-17-19
Date

STATE OF TEXAS
HOYT SEIDENSTICKER
3588
REGISTERED SANITARIAN

Land Stewardship Services, LLC, 27115 Bent Trail, Boerne, Texas 78006
Cell (210) 414-6603,

Effective Immediately: If any change(s) are made that require a revision to this design, a $150.00 fee will be assessed. This includes, but not limited to, change(s) in the house size, number of bedrooms, location of house or one type of system to another.

Site Map
Aerobic with Spray Distribution System
Ed Dupont
Lot 59B, Emerald Valley
6833 Chimney Rock
Canyon Lake, Texas 78133
Comal County

Scale 1" = 50'

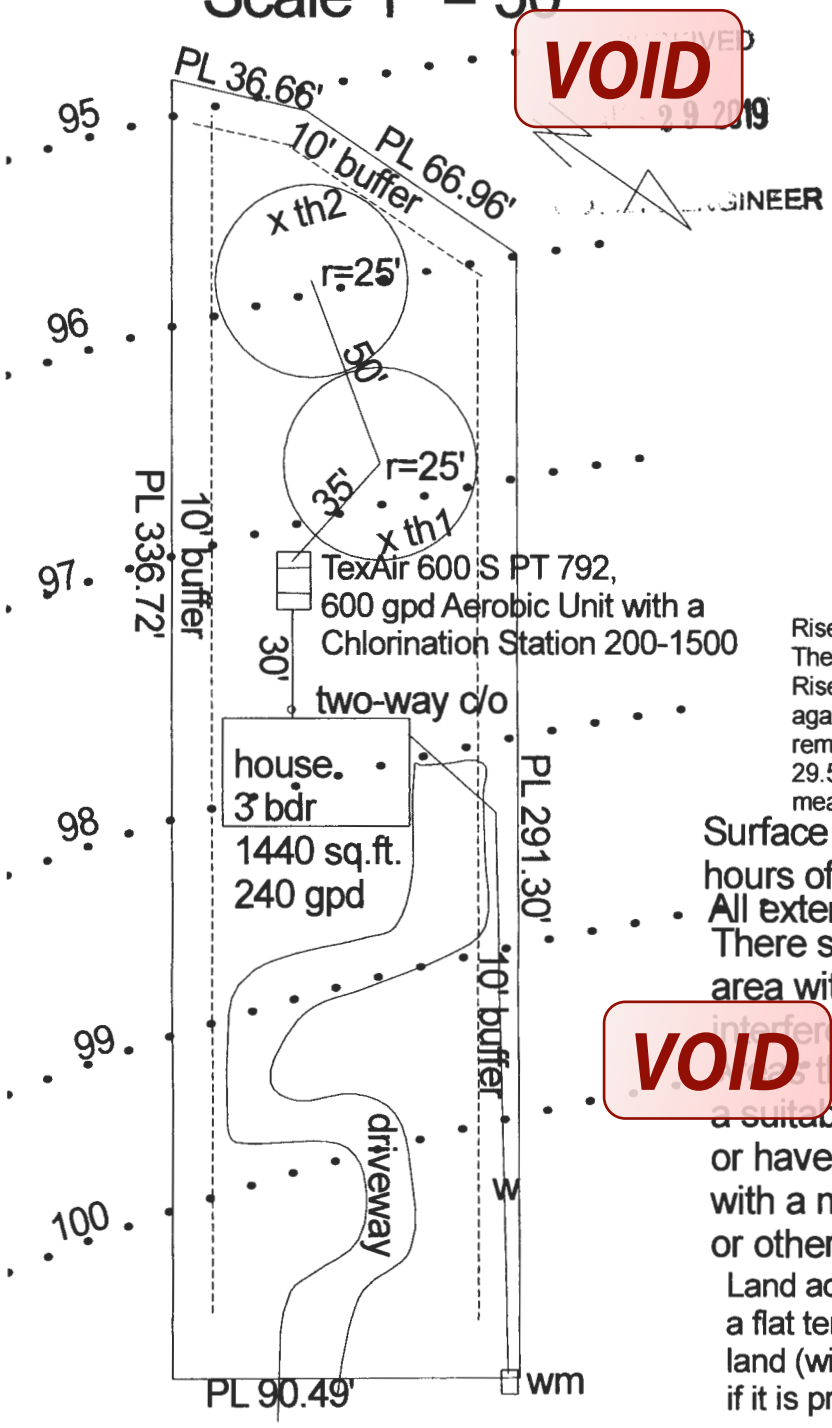

This design complies with all provisions of the existing Edwards Contributing Zone Plan and their is not a recharge feature within 150' of the proposed septic system.

Risers must be permanently fastened to the tank lid or cast into the tank The connection between the riser and the tank lid must be watertight. Risers must be fitted with removable watertight caps and protected against unauthorized intrusions by either a padlock, a cover that can be removed with specialized tools, a cover having a minimum net weight of 29.5 kilograms (65 pounds) set into a recess of the tank lid, or any other means approved by the executive director.

Surface application should be done between the hours of 12:00 midnight and 5:00 a.m.

All external electrical lines must be in gray conduit

There shall be nothing in the surface application area within ten feet of the sprinkler which would interfere with the uniform application of the effluent

VOID

Areas that rock is exposed must be covered with a suitable amount of material. Areas that are bare or have been disturbed must be seeded or sodded with a mixture of rye and bermuda grasses or other grass species prior to system operation.

Land acceptable for surface application shall have a flat terrain (less than to equal to 15% slope). Sloped land (with greater than 15% slope) may be acceptable if it is properly landscaped and terraced to minimize runoff.

Chimney Rock

100 yr flood plain does not exist on this tract

location of sprinkler heads may be adjusted in field to avoid obstacles

I hereby request a variance to the 20 foot setback to property lines as required by Comal County Order to a 10' setback to property lines as required by TCEQ, Chapter 285 and equivalent protection will be maintained by adding a battery backup to the timer clock or photo cell activated timer to assure sprayers to only spray during the predawn hours. In my professional opinion this variance will not pose a threat to the environment or public health.

8-17-19

STATE OF TEXAS
HOYT SEIDENSTICKER
3588
REGISTERED SANITARIAN

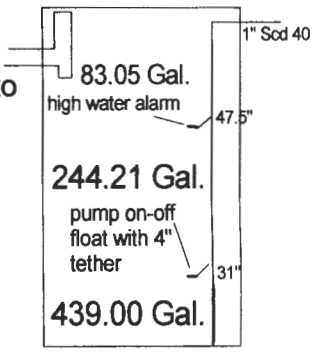

11.

429

3

FILED ... 94 OCT -3 PM 4:38

COUNTY ... COUNTY

BY Dave H. Reynolds 11.00 pd

WARRANTY DEED

Date: September 30, 1994

Grantor: STEVEN F. YORK, a single man

Grantor's Mailing Address: (including county) c/o NATIONSBANK, P. O. Box 2260, Ft. Worth, in Tarrant County, Texas 76113-2260

Grantee: EDWARD J. DUPONT

Grantee's Mailing Address: (including county) 14919 Ben Ali, San Antonio Bexar County, Texas 78248

RECEIVED
AUG 29 2019
COUNTY ENGINEER

Consideration:

TEN AND NO/100 DOLLARS and other good and valuable consideration.

Property (including any improvements):

All of my undivided one-half 1/2 interest in and to that certain tract or parcel of land lying and being situated in Comal County, Texas, being known and designated as Lots 59-A and 59-B EMERALD VALLEY SUBDIVISION, according to map or plat recorded in Vol. 8, Page 333, Comal County, Texas Map and Plat Records.

All of my undivided one-half interest in and to that certain tract or parcel of land lying and being situated in Comal County, Texas, being known and designated as Lot 68-I, EMERALD VALLEY SUBDIVISION, according to map or plat recorded in Vol. 8, Page 326, Comal County, Texas Map and Plat Records.

All of my undivided one-half interest in and to that certain tract or parcel of land lying and being situated in Comal County, Texas, being known and designated as Lot 58-A, EMERALD VALLEY SUBDIVISION, according to map or plat recorded in Vol. 8, Page 142, Comal County, Texas Map and Plat Records.

Reservations from and Exceptions to Conveyance and Warranty:

Current ad valorem taxes on said property having been prorated, the payment of the same are hereby assumed by Grantee.

This conveyance is made and accepted subject to the following matters, to the extent same are in effect at this time: Any and all restrictions, assessments, maintenance charges, covenants, conditions and easements, if any, relating to the hereinabove described property, but only to the extent they are still in effect and shown of record in the hereinabove mentioned County and State.

Grantor, for consideration and subject to the reservations from and exceptions to conveyance and warranty, grants, sells and conveys to Grantee the property, together with all and singular the rights and appurtenances thereto in any wise belonging, to have and to hold it to Grantee, Grantee's heirs, executors, administrators, successors, or assigns forever. Grantor binds Grantor and Grantor's heirs, executors, administrators, and successors to warrant and forever defend all and singular the property to Grantee and Grantee's heirs, executors, administrators, successors, and assigns against every person whomsoever lawfully claiming or to claim the same or any part thereof, except as to the reservations from and exceptions to conveyance and warranty.

When the context requires, singular nouns and pronouns include the plural.

STEVEN F. YORK

RECEIVED
AUG 29 2019
COUNTY ENGINEER

STATE OF TEXAS ¶
¶
COUNTY OF Tarrant ¶

This instrument was acknowledged on this 31st day of September, 1994, by STEVEN F. YORK.

JOANNE WALLING
NOTARY PUBLIC
STATE OF TEXAS
My Comm. Exp. 10-12-96

NOTARY PUBLIC

Printed Name: JoAnne Walling
Commission Expires: 10-12-96

After Recording Return To:
EDWIN K. NOLAN
P. O. Box 2017
Canyon Lake, TX 78130-2017
Telephone: (210) 907-3007
Fax: (210) 907-3004

Prepared in the Law Office of:
EDWIN K. NOLAN
P. O. Box 2017
Canyon Lake, TX 78130-2017
Telephone: (210) 907-3007
Fax: (210) 907-3004

WD.york

a.

427

9 2

FILED FOR RECORD
94 OCT -3 PM 4:37
COUNTY CLERK COMAL COUNTY
BY David Reynolds
9th rd

RECEIVED
AUG 29 2019
COUNTY ENGINEER

RELEASE OF LIEN

DATE: September 30, 1994

NOTE:

DATE: November 8, 1986

ORIGINAL AMOUNT: $2,512.50

MAKER: STEVEN F. YORK and EDWARD J. DUPONT

PAYEE: EMERALD DEVELOPMENT, INC.

DATE OF MATURITY: AS THEREIN PROVIDED

HOLDER OF NOTE AND LIEN: EDWIN K. NOLAN

HOLDER'S MAILING ADDRESS: (INCLUDING COUNTY) P. O. Box 2017, Canyon Lake Comal County, Texas 78130

NOTE AND LIEN ARE DESCRIBED IN THE FOLLOWING DOCUMENTS, RECORDED IN:

Warranty Deed with Vendor's Lien duly recorded in Volume 561, Page 227 of the Official Public Records of Comal County, Texas;

Deed of Trust duly recorded in Volume 561, Page 229 of the Official Public Records of Comal County, Texas;

Transfer of Lien recorded in Volume 668, Page 510 of the Official Public Records of Comal County, Texas.

PROPERTY (INCLUDING ANY IMPROVEMENTS) SUBJECT TO LIEN:

All that certain tract or parcel of land lying and being situated in Comal County, Texas being known and designated as Lot 59-B, EMERALD VALLEY SUBDIVISION, a subdivision in Comal County, Texas, as shown on a map or plat thereof recorded in Volume 8, Page 333 of the Map and Plat Records of Comal County, Texas.

Holder of the Note acknowledges its payment and releases the property from the lien.

When the context requires, singular nouns and pronouns include the plural.

EDWIN K. NOLAN

STATE OF TEXAS §
§
COUNTY OF §

This instrument was acknowledged before me on the 3rd day of October, 1994 by Edwin K Nolan

NOTARY PUBLIC, STATE OF TEXAS

AFTER RECORDING RETURN TO:
Edwin K. Nolan
P.O. Box 2017
Canyon Lake, TX 78130
Telephone: (210) 964-3007
REL.59B

PREPARED IN THE LAW OFFICES OF:
Edwin K. Nolan
P.O. Box 2017
Canyon Lake, TX 78130
Telephone: (210) 964-3007

Release

ANITA BURSIEL
MY COMMISSION EXPIRES
August 14, 1995

a.

300 428

FILED
94 OCT -3 PM 4:37
COUNTY CLE COUNTY
BY Dave H. Reynolds
9.00 rd.

RECEIVED
AUG 29 2019
COUNTY ENGINEER

RELEASE OF LIEN

DATE: September 30, 1994

NOTE:

DATE: November 8, 1986

ORIGINAL AMOUNT: $2,062.50

MAKER: STEVEN F. YORK and EDWARD J. DUPONT

PAYEE: EMERALD DEVELOPMENT, INC.

DATE OF MATURITY: AS THEREIN PROVIDED

HOLDER OF NOTE AND LIEN: EDWIN K. NOLAN

HOLDER'S MAILING ADDRESS: (INCLUDING COUNTY) P. O. Box 2017, Canyon Lake Comal County, Texas 78130

NOTE AND LIEN ARE DESCRIBED IN THE FOLLOWING DOCUMENTS, RECORDED IN:

Warranty Deed with Vendor's Lien duly recorded in Volume 561, Pages 621 of the Official Public Records of Comal County, Texas;

Deed of Trust duly recorded in Volume 561, Page 623 of the Official Public Records of Comal County, Texas;

Transfer of Lien recorded in Volume 668, Page 510 of the Official Public Records of Comal County, Texas.

PROPERTY (INCLUDING ANY IMPROVEMENTS) SUBJECT TO LIEN:

All that certain tract or parcel of land lying and being situated in Comal County, Texas being known and designated as Lot 68-I, EMERALD VALLEY SUBDIVISION, a subdivision in Comal County, Texas, as shown on a map or plat thereof recorded in Volume 8, Page 326 of the Map and Plat Records of Comal County, Texas.

Holder of the Note acknowledges its payment and releases the property from the lien.

When the context requires, singular nouns and pronouns include the plural.

EDWIN K. NOLAN

STATE OF TEXAS §
§
COUNTY OF §

This instrument was acknowledged before me on the 3rd day of October, 1994 by Edwin K Nolan.

NOTARY PUBLIC, STATE OF TEXAS

AFTER RECORDING RETURN TO:
Edwin K. Nolan
P.O. Box 2017
Canyon Lake, TX 78130
Telephone: (210) 964-3007
REL.68I

PREPARED IN THE LAW OFFICES OF:
Edwin K. Nolan
P.O. Box 2017
Canyon Lake, TX 78130
Telephone: (210) 964-3007

Release

ANITA BURSIEL
MY COMMISSION EXPIRES
August 14, 1995

a.

426

FILED FOR RECORD
94 OCT -3 PM 4:37
COUNTY CLERK COMAL COUNTY
BY Dana H. Reynolds
9th rd

RELEASE OF LIEN

DATE: September 30, 1994

NOTE:

DATE: November 8, 1986

ORIGINAL AMOUNT: $2,512.50

MAKER: STEVEN F. YORK and EDWARD J. DUPONT

PAYEE: EMERALD DEVELOPMENT, INC.

DATE OF MATURITY: AS THEREIN PROVIDED

RECEIVED
AUG 29 2019
COUNTY ENGINEER

HOLDER OF NOTE AND LIEN: EDWIN K. NOLAN

HOLDER'S MAILING ADDRESS: (INCLUDING COUNTY) P. O. Box 2017, Canyon Lake Comal County, Texas 78130

NOTE AND LIEN ARE DESCRIBED IN THE FOLLOWING DOCUMENTS, RECORDED IN:

Warranty Deed with Vendor's Lien duly recorded in Volume 561, Page 217 of the Official Public Records of Comal County, Texas;

Deed of Trust duly recorded in Volume 561, Page 219 of the Official Public Records of Comal County, Texas;

Transfer of Lien recorded in Volume 668, Page 510 of the Official Public Records of Comal County, Texas.

PROPERTY (INCLUDING ANY IMPROVEMENTS) SUBJECT TO LIEN:

All that certain tract or parcel of land lying and being situated in Comal County, Texas being known and designated as Lot 58-A, EMERALD VALLEY SUBDIVISION, a subdivision in Comal County, Texas, as shown on a map or plat thereof recorded in Volume 8, Page 142 of the Map and Plat Records of Comal County, Texas.

Holder of the Note acknowledges its payment and releases the property from the lien.

When the context requires, singular nouns and pronouns include the plural.

EDWIN K. NOLAN

STATE OF TEXAS §
§
COUNTY OF §

This instrument was acknowledged before me on the 3rd day of October 1994 by Edwin K Nolan

NOTARY PUBLIC, STATE OF TEXAS

AFTER RECORDING RETURN TO:
Edwin K. Nolan
P.O. Box 2017
Canyon Lake, TX 78130
Telephone: (210) 964-3007
REL.58A

PREPARED IN THE LAW OFFICES OF:
Edwin K. Nolan
P.O. Box 2017
Canyon Lake, TX 78130
Telephone: (210) 964-3007

ANITA BURSIEL
MY COMMISSION EXPIRES
August 14, 1995

Release

a.

425

FILED FOR RECORD
94 OCT -3 PM 4:37
COUNTY ... COUNTY
BY Dorothy Reynolds
9 pd.

AUG 29 2019
COUNTY ENGINEER

RELEASE OF LIEN

DATE: September 30, 1994

NOTE:

DATE: November 8, 1986

ORIGINAL AMOUNT: $2,512.50

MAKER: STEVEN F. YORK and EDWARD J. DUPONT

PAYEE: EMERALD DEVELOPMENT, INC.

DATE OF MATURITY: AS THEREIN PROVIDED

HOLDER OF NOTE AND LIEN: EDWIN K. NOLAN

HOLDER'S MAILING ADDRESS: (INCLUDING COUNTY) P. O. Box 2017, Canyon Lake Comal County, Texas 78130

NOTE AND LIEN ARE DESCRIBED IN THE FOLLOWING DOCUMENTS, RECORDED IN:

Warranty Deed with Vendor's Lien duly recorded in Volume 561, Page 834 of the Official Public Records of Comal County, Texas;

Deed of Trust duly recorded in Volume 561, Page 836 of the Official Public Records of Comal County, Texas;

Transfer of Lien recorded in Volume 668, Page 510 of the Official Public Records of Comal County, Texas.

PROPERTY (INCLUDING ANY IMPROVEMENTS) SUBJECT TO LIEN:

All that certain tract or parcel of land lying and being situated in Comal County, Texas being known and designated as Lot 59-A, EMERALD VALLEY SUBDIVISION, a subdivision in Comal County, Texas, as shown on a map or plat thereof recorded in Volume 8, Page 333 of the Map and Plat Records of Comal County, Texas.

Holder of the Note acknowledges its payment and releases the property from the lien.

When the context requires, singular nouns and pronouns include the plural.

EDWIN K. NOLAN

STATE OF TEXAS §
§
COUNTY OF §

This instrument was acknowledged before me on the 3rd day of October, 1994 by Edwin K Nolan

NOTARY PUBLIC, STATE OF TEXAS

AFTER RECORDING RETURN TO:
Edwin K. Nolan
P.O. Box 2017
Canyon Lake, TX 78130
Telephone: (210) 964-3007
REL.59A

PREPARED IN THE LAW OFFICES OF:
Edwin K. Nolan
P.O. Box 2017
Canyon Lake, TX 78130
Telephone: (210) 964-3007

Release

ANITA BURSIEL
MY COMMISSION EXPIRES
August 14, 1995

COUNTRYSIDE CONSTRUCTION, INC.
300 CHAPMAN PARKWAY
CANYON LAKE, TX 78133

Phone: 830-899-2615
Fax: 830-899-6662

TESTING AND REPORTING RECORD

This Testing and Reporting Record shall be completed, signed and dated after each inspection

1. Inspection Date: JUNE 21,2020 Installed: 10/21/2019 Service Expires:10/21/2021

BILLING ADDRESS:
NICOLE SCHINDLER
6833 CHIMNEY ROCK
CANYON LAKE, TX 78133

PHYSICAL ADDRESS:
6833 CHIMNEY ROCK
CANYON LAKE, TX 78133

TELEPHONE: 580-730-3443
ALT. PHONE:

LOT: LT

PERMIT#: 109637
COUNTY: COMAL
SN.

SUBDIVISION: EMERALD VALLEY MFG: TEXAIR-600

MAPSCO: N/A

NOTES:
TYPE OF SYSTEM: SPRAY

Inspected Item:	Operational	Inoperative
Aerators SCFM/Compressors PSI (Record Pressure Reading)	1.25	
Filters	/	
Irrigation Pumps	/	
Recirculation Pumps	N/A	
Disinfection Device	/	
Chlorine Supply	/	
Electrical Circuits	/	
Distribution System	/	
Sprayfield Vegetation	/	
Back Flush Drip Field, if applicable	N/A	
Other as Noted	/	
Access Posts are Secured	Yes	No

2. Action taken or Repairs or Needed repairs to system (list all components replaced):

CHECKED pump, Alarm, FLOATS, Chlorine, SPRINKLERS, Compresson

SYSTEM OPERATING AS DESIGNED? (Y) N

3. Tests required and results:

	Required		Results	Test
	Yes	No	mg/l mpn/100ml or Trace	Method
BOD(Grab)				
TSS(Grab)		/	CLEAR	
Cl(Grab)	/			
Fecal Coliform				

Copies of this report have been forwarded to the following: COMAL county / homeowner

Maintenance Technician: THOMAS

Date of completion: 7/2/20 Start Job Time: _____ Stop Job Time: _____

Maintenance Provider: Water Engineer

COUNTRYSIDE CONSTRUCTION, INC.
300 CHAPMAN PARKWAY
CANYON LAKE, TX 78133

Phone: 830-899-2615
Fax: 830-899-6662

TESTING AND REPORTING RECORD

This Testing and Reporting Record shall be completed, signed and dated after each inspection.

1. Inspection Date: OCTOBER 21, 2020 Installed: 10/21/2019 Service Expires: 10/21/2021

BILLING ADDRESS:
NICOLE SCHINDLER
6833 CHIMNEY ROCK
CANYON LAKE, TX 78133

PHYSICAL ADDRESS:
6833 CHIMNEY ROCK
CANYON LAKE, TX 78133

TELEPHONE: 580-730-3443
ALT. PHONE:

LOT: LT

PERMIT#: 109637
COUNTY: COMAL
SN:

SUBDIVISION: EMERALD VALLEY MFG: TEXAIR-600

MAPSCO: N/A

NOTES:
TYPE OF SYSTEM: SPRAY

Inspected Item:	Operational	Inoperative
Aerators 3CFM/Compressors PSI (Record Pressure Reading)	1,25	
Filters	/	
Irrigation Pumps	/	
Recirculation Pumps	N/A	
Disinfection Device	/	
Chlorine Supply	/	
Electrical Circuits	/	
Distribution System	/	
Sprayfield Vegetation	/	
Back Flush Drip Field, if applicable	N/A	
Other as Noted	/	

2. Action taken or Repairs or Needed repairs to system (list all components replaced):

CHECKED CHLORINE, SPRINKLERS, PUMP, Alarm, FLOATS, Compressor

SYSTEM OPERATING AS DESIGNED? (Y)/N

Access Posts are Secured (Yes) No

3. Tests required and results:

	Required		Results	Test
	Yes	No	mg/l mpn/100ml or Trace	Method
BOD(Grab)				
TSS(Grab)		/	CLEAR	
Cl(Grab)	/			
Fecal Coliform				

Copies of this report have been forwarded to the following: COMAL county / homeowner.

Maintenance Technician: THOMAS 11

Date of completion: 11/2/20 Start Job Time: 12:20 Stop Job Time: 12:40

Maintenance Provider: Walker Clupman

Aerobic Maintenance Solution LLC
P O Box 311899
New Braunfels, TX 78131

Phone: (830) 312-8776
AerobicSolutions.net

Printed: 10/27/2020

Permit #: 109367

To: Mike & Nicole Caldwell
1286 Hidden Valley Drive
Spring Branch, TX 78070

Tech: Not Assigned
Brand/Mfg.: SOLAR AIRE -
System S/N:
Aerator and S/N:

Site: 1286 Hidden Valley Drive, Spring Branch
Agency: Comal County Environmental Health
County: Comal
Subdivision: Rebecca Creek Par

Contract: 7/8/2019 - 7/8/2021
Inspections per year: 3
Service Due: 11/15/2020
Alt Phone: (210) 827-2594

Phone: (210) 355-2147
Cell:
Work:

SCHEDULED
Inspection Type: INSPECTION Inspection # 4 of 6 for the contract year
BRAND OF SEPTIC SYSTEM

Item	Operational	Inoperative	N/A
Aerator:			✓
Irrigation pump:	✓		
Air compressor:	✓		
Disinfection device:			✓
Chlorine supply:			✓
Spray field vegetation:	✓		
Sprinkler / Drip backwash:	✓		
Photocell Test:			✓

Air Compressor Reading: CFM: _____ PSI: 4

Test Results and observations: (As Required)
Chlorine Residual: N/A
Test Method: cr6
BOD:
TSS:
Tank Lids Secured: yes
Repairs made: Y (N)
Sludge Levels: Tank 1: N/A Tank 2: 0" Tank 3: 2"

Repairs and Comments: Repair Bad low float

Inspector: _____ Date: 11-10-20

Area: / 0
GPS: ID = 566

COUNTRYSIDE CONSTRUCTION, INC.
300 CHAPMAN PARKWAY
CANYON LAKE, TX 78133

Phone: 830 899-2615
Fax. 830-899-6662

TESTING AND REPORTING RECORD

This Testing and Reporting Record shall be completed signed and dated after each inspection

1.Inspection Date: FEBRUARY 21,2021 Installed: 10/21/2019 Service Expires 10/21/2021

BILLING ADDRESS:
NICOLE SCHINDLER
6833 CHIMNEY ROCK
CANYON LAKE, TX 78133

PHYSICAL ADDRESS:
6833 CHIMNEY ROCK
CANYON LAKE, TX 78133

TELEPHONE: 580-730-3443
ALT. PHONE:

LOT: LT

PERMIT#. 109637
COUNTY: COMAL
SN:

SUBDIVISION: EMERALD VALLEY MFG: TEXAIR-600

MAPSCO: N/A

NOTES:
TYPE OF SYSTEM: SPRAY

Inspected Item:	Operational	Inoperative
Aerators SCFM/Compressor PSI (Record Pressure Reading	3.0	
Filters	✓	
Irrigation Pumps	✓	
Recirculation Pumps	N/A	
Disinfection Device	✓	
Chlorine Supply	✓	
Electrical Circuits	✓	
Distribution System	✓	
Sprayfield Vegetation	✓	
Back Flush Drip Field, if applicable	N/A	
Other as Noted		
Access Ports are Secured	(Yes)	No

2. Action taken or Repairs or Needed repairs to system (List all components replaced :

checked compressor
checked Pump
checked floats
checked sprinklers
set timer

SYSTEM OPERATING AS DESIGNED: (Y)/N

3. Tests required and results:

	Required		Results	Test
	Yes	No	mg/l mpn/100ml or Trace	Method
BOD(Grab)				
TSS(Grab)		✓		Grab
Cl(Grab)	✓		1.0	DPD
Fecal Coliform	✓			

Copies of this report have been forwarded to the following: COMAL county / homeowner

Maintenance Technician: Bar

5

Date of completion: 4-9-21 Start Job Time: _____ Stop Job Time: _____

Maintenance Provider: Walker Chapman

COUNTRYSIDE CONSTRUCTION, INC.
300 CHAPMAN PARKWAY
CANYON LAKE, TX 78133

Phone: 830-899-2615
Fax: 830-899-6662

TESTING AND REPORTING RECORD

This Testing and Reporting Record shall be completed, signed and dated after each inspection.

1. Inspection Date: JUNE 21, 2021 Installed: 10/21/2019 Service Expires: 10/21/2021

BILLING ADDRESS:
NICOLE SCHINDLER
6833 CHIMNEY ROCK
CANYON LAKE, TX 78133

PHYSICAL ADDRESS:
6833 CHIMNEY ROCK
CANYON LAKE, TX 78133

TELEPHONE: 580-730-3443
ALT. PHONE:

LOT: LT

PERMIT#: 109637
COUNTY: COMAL
SN:

SUBDIVISION: EMERALD VALLEY MFG: TEXAIR-600

MAPSCO: N/A

NOTES:
TYPE OF SYSTEM: SPRAY

Inspected Item:	Operational	Inoperative
Aerators 3CFM/Compressors PSI (Record Pressure Reading)	1.25	
Filters	✓	
Irrigation Pumps	✓	
Recirculation Pumps	NA	
Disinfection Device	✓	
Chlorine Supply	✓	
Electrical Circuits	✓	
Distribution System	✓	
Sprayfield Vegetation	✓	
Back Flush Drip Field, if applicable	N/A	
Other as Noted		

2. Action taken or Repairs or Needed repairs to system (list all components replaced):

Chd pump & floats
Cleaned filter
Chd alarms & spray heads

SYSTEM OPERATING AS DESIGNED? Y/N

Access Posts are Secured	Yes	No

3. Tests required and results:

	Required		Results	Test
	Yes	No	mg/l mpn/100ml or Trace	Method
BOD (Grab)				
TSS (Grab)	✓		Clear	Grab
Cl (Grab)	✓		1.0	OTO
Fecal Coliform				

Copies of this report have been forwarded to the following: COMAL county / homeowner.

Maintenance Technician: [signature]

Date of completion: 8-3-21 Start Job Time: _____ Stop Job Time: _____

Maintenance Provider: Walker Chapman

COUNTRYSIDE CONSTRUCTION, INC.
300 CHAPMAN PARKWAY
CANYON LAKE, TX 78133

Phone: 830-899-2615
Fax: 830-899-6662

TESTING AND REPORTING RECORD

This Testing and Reporting Record shall be completed, signed and dated after each inspection.

1.Inspection Date: OCTOBER 21,2021 Installed: 10/21/2019 Service Expires:10/21/2021

BILLING ADDRESS:
NICOLE SCHINDLER
6833 CHIMNEY ROCK
CANYON LAKE, TX 78133

PHYSICAL ADDRESS:
6833 CHIMNEY ROCK
CANYON LAKE, TX 78133

TELEPHONE: 580-730-3443
ALT. PHONE:

LOT: LT

PERMIT#: 109637
COUNTY: COMAL
SN:

SUBDIVISION: EMERALD VALLEY MFG: TEXAIR-600

MAPSCO: N/A

NOTES:
TYPE OF SYSTEM: SPRAY

Inspected Item:	Operational	Inoperative
Aerators SCFM/Compressors PSI (Record Pressure Reading)	✓	
Filters	✓	
Irrigation Pumps	✓	
Recirculation Pumps	✓	
Disinfection Device	✓	
Chlorine Supply	✓	
Electrical Circuits	✓	
Distribution System	✓	
Sprayfield Vegetation		
Back Flush Drip Field, if applicable		
Other as Noted		
Access Posts are Secured	Yes	No

2. Action taken or Repairs or Needed repairs to system (list all components replaced):

Pump and alarm test. good
compressor Filter cleaned.
Sprinklers work good.

SYSTEM OPERATING AS DESIGNED? Y/N

3. Tests required and results:

	Required		Results	Test
	Yes	No	mg/l mpn/100ml or Trace	Method
BOD(Grab)				
TSS(Grab)				
Cl(Grab)				
Fecal Coliform				

Copies of this report have been forwarded to the following: COMAL county / homeowner.

Maintenance Technician: Cayenne 10%

Date of completion: NOV 18 Start Job Time: 3:00 PM Stop Job Time: 3:25 PM

Maintenance Provider: Walker Chapman

Countryside *Construction, Inc.*
300 Chapman Parkway, Canyon Lake, TX. 78133
Phone: 830-899-2615 or 1-888-379-3721 Fax: 830-899-6662

SEPTIC SYSTEM SERVICE AGREEMENT

In consideration of payment for this service contract, we will abide by and agree to its terms and conditions:

Name: SYDNIE ENGLISH **Address: 6833 CHIMNEY ROCK**
Sub-Div./County: EMERALD VALLEY, COMAL **CANYON LAKE, TX 78133**
Permit #: 109637 SPRAY Model #: TEXAIR-600 Serial #:
Phone: 530-414-8900, ssenglish1@cougars.ccis.edu

( ) Initial Two Year Service Agreement & Two Year Limited Warranty

(X) ~~One~~ Two Year Service Agreement
$325.00 + $95.00 Initial Analysis

Legal Description: LT EMERALD VALLEY, COMAL

The effective date of the Initial maintenance contract shall be the date the License to Operate is issued.
For $325.00 + $95.00 initial analysis, this non-refundable contract will be in effect **FROM: 8/29/2022 TO: 8/29/~~2023~~ 2024** and will provide the following:

- An inspection every (4) four months which will include: Servicing of the mechanical & electrical components as necessary to ensure system is functioning as engineer designed, pulling and cleaning the aerator shaft, cleaning compressor air filters, check chlorine, conduct solids test to determine if system should be pumped, back flushing tubing for drip irrigation fields and checking sprinklers on above ground systems.

1) **The property owner is responsible for "purchasing and keeping chlorine"** in the chlorinator, (if applicable). If the chlorine test reveals "No Chlorine" in the system, the property owner may incur an additional cost.
2) If any improper operation is observed (which cannot be corrected at that time) the property owner will be notified immediately of the conditions and the estimated cost.
3) **ANY PARTS, WARRANTY OR NON-WARRANTY, FREIGHT CHARGES, LABOR OR SERVICE CALLS NOT PAID IN FULL AT THE END OF (30) DAYS SHALL REMAIN THE PROPERTY OF COUNTRYSIDE CONSTRUCTION AND AUTHORIZES CONTRACTOR TO REMOVE AND REPOSSESS ANY PARTS INSTALLED. CLIENT FURTHER AGREES TO PAY ANY LABOR COST OF THE INSTALLATION AND REASONABLE COST OF REMOVAL OF SAID PARTS.**
4) **THE SIGNING OF THIS SERVICE AGREEMENT AUTHORIZES COUNTRYSIDE CONSTRUCTION TO ENTER THE PROPERTY TO EXECUTE ALL TERMS OF THIS CONTRACT.**

Countryside Construction, Inc., **will warranty installation** of the septic system to be according to state and county regulations and the designs approved by the county. **HOMEOWNER WILL BE RESPONSIBLE FOR SERVICE CALLS, LABOR AND SHIPPING COSTS ON ANY "WARRANTIED PARTS" EXCHANGED DURING WARRANTY.** All other components will be according to manufacturer's warranties.
Important: As Countryside Construction, Inc. **cannot control what or how much effluent goes into this septic system, we cannot warranty** how the system will function. Refer to manufacturers or installer's instructions, for suggestions on septic operation. If necessary, between inspections, it is the property owner's responsibility to clean the micron filters on drip irrigation systems. This service agreement **does not** cover the cost of **"service calls, labor or materials** that are required or **parts out of warranty,** the failure to maintain electrical power to the system, **sprinklers that are broken,** leaking, stopped-up or otherwise mal-functioning; or sewage flows exceeding the hydraulic/organic design capabilities and the input of non-biodegradable materials (solvents, grease, oil, paints, etc.), or any usage contrary to the requirements as advised by authorized service representative. Laboratory test work is available at an additional cost. Chlorine, filters, or parts that are out of warranty are available at a reasonable cost.
This contract **does not** include the **pumping of a tank** or of any **compartment of a tank, or settlement of soil on or around any part of the system regardless of reason:**
Violations of the warranty also include: disconnecting the alarm, restricting ventilation to the aerator, overloading the system above its rated capacity; or flooding by external means. Rodent, insect or fire ant damage or any other form of unusual abuse is a violation.
A renewal service contract **should** be **"activated" (30) thirty days before expiration** of existing contract. We will contact property owner prior to expiration of existing contract.

Serviced by: COUNTRYSIDE CONSTRUCTION, INC.
Walker Chapman – Installer Licensee #OS0002929-OSSF **Maintenance Provider Licensee #MP0000035**

(X) Sydnie English Print Name (X) Sydnie English Date: 30 Aug 22
Property Owner Signature

(X) Walker Chapman Date: 10-11-22 Authorized Service Representative *(revised 08/13/2020)*

PAID 9/20/22

COUNTRYSIDE CONSTRUCTION, INC.
300 CHAPMAN PARKWAY
CANYON LAKE, TX 78133

Phone: 830-899-2615
Fax: 830-899-6662

TESTING AND REPORTING RECORD

This Testing and Reporting Record shall be completed, signed and dated after each inspection.

1. Inspection Date: APRIL 29,2023 Installed: 10/21/2019 Service Expires:8/29/2024

BILLING ADDRESS:
SYDNIE ENGLISH
6833 CHIMNEY ROCK
CANYON LAKE, TX 78133

PHYSICAL ADDRESS:
6833 CHIMNEY ROCK
CANYON LAKE, TX 78133

TELEPHONE: 530-414-8900
ALT. PHONE:
GATE CODE:
SUBDIVISION: EMERALD VALLEY MFG: TEXAIR-600

LOT: LT

PERMIT#: 109637
COUNTY: COMAL
SN:
MAPSCO: N/A

NOTES:
TYPE OF SYSTEM: SPRAY

Inspected Item:	Operational	Inoperative
Aerators 8CFM/Compressors PSI Record Pressure Reading	2.0PSI	
Filters	/	
Irrigation Pumps	/	
Recirculation Pumps	N/A	
Disinfection Device	/	
Chlorine Supply	/	
Electrical Circuits	/	
Distribution System	/	
Sprayfield Vegetation		
Back Flush Drip Field, if applicable	N/A	
Other as Noted		

2. Action taken or Repairs or Needed repairs to system (list all components replaced):
pump and alarm test good. All floats work, sprayers work good. Chlorine filled.

SYSTEM OPERATING AS DESIGNED? Y/N

Access Posts are Secured	Yes	No

3. Tests required and results:

	Required		Results	Test
	Yes	No	mg/l mpn/100ml or Trace	Method
BOD (Grab)				
TSS (Grab)		/		
Cl (Grab)	/		0.01	DPD
Fecal Coliform				

Copies of this report have been forwarded to the following: COMAL county / homeowner.

Maintenance Technician: Cayenne 10

Date of completion: 5-10-23 Start Job Time: 2:15 pm Stop Job Time: 2:35pm

Maintenance Provider: Walker Chapman

COUNTRYSIDE CONSTRUCTION, INC.
300 CHAPMAN PARKWAY
CANYON LAKE, TX 78133

Phone: 830-899-2615
Fax: 830-899-6662

TESTING AND REPORTING RECORD

This Testing and Reporting Record shall be completed, signed and dated after each inspection.

1. Inspection Date: December 29,2022 Installed: 10/21/2019 Service Expires: 8/29/2024

BILLING ADDRESS:
SYDNIE ENGLISH
6833 CHIMNEY ROCK
CANYON LAKE, TX 78133

31st
10:00 Am

PHYSICAL ADDRESS:
6833 CHIMNEY ROCK
CANYON LAKE, TX 78133

TELEPHONE: 530-414-8900
ALT. PHONE:
GATE CODE:
SUBDIVISION: EMERALD VALLEY MFG: TEXAIR-600

LOT: LT

PERMIT#: 109637
COUNTY: COMAL
SN:
MAPSCO: N/A

NOTES:
TYPE OF SYSTEM: SPRAY

Inspected Item:	Operational	Inoperative
Aerators SCFM/Compressors PSI Record Pressure Reading	1.5 PSI	
Filters	✓	
Irrigation Pumps	✓	
Recirculation Pumps	N/A	
Disinfection Device	✓	
Chlorine Supply	✓	
Electrical Circuits	✓	
Distribution System	✓	
Sprayfield Vegetation	✓	
Back Flush Drip Field, if applicable	N/A	
Other as Noted		

2. Action taken or Repairs or Needed repairs to system (list all components replaced):
Pump and alarm test good, All floats work, sprayers work
Good. chlorine full. Compressor
Filter cleaned

SYSTEM OPERATING AS DESIGNED? Y/N

Access Posts are Secured	Yes	No

3. Tests required and results:

	Required		Results	Test
	Yes	No	mg/l mpn/100ml or Trace	Method
BOD (Grab)				
TSS (Grab)		✓		
Cl (Grab)	✓		0.01	OTO
Fecal Coliform				

Copies of this report have been forwarded to the following: COMAL county / homeowner.

Maintenance Technician: Cayenne 10

Date of completion: 12/31 Start Job Time: 10:25 Am Stop Job Time: 10:45 Am

Maintenance Provider: Walker Chapman

COUNTRYSIDE CONSTRUCTION, INC.
300 CHAPMAN PARKWAY
CANYON LAKE, TX 78133

Phone: 830-899-2615
Fax: 830-899-6662

TESTING AND REPORTING RECORD

This Testing and Reporting Record shall be completed, signed and dated after each inspection.

1. Inspection Date: AUGUST 29,2023 Installed: 10/21/2019 Service Expires:8/29/2024

BILLING ADDRESS:
SYDNIE ENGLISH
6833 CHIMNEY ROCK
CANYON LAKE, TX 78133

Sat
Kch
call

PHYSICAL ADDRESS:
6833 CHIMNEY ROCK
CANYON LAKE, TX 78133

TELEPHONE: 530-414-8900
ALT. PHONE:
GATE CODE:
SUBDIVISION: EMERALD VALLEY MFG: TEXAIR-600

LOT: LT

PERMIT#: 109637
COUNTY: COMAL
SN:
MAPSCO: N/A

NOTES:
TYPE OF SYSTEM: SPRAY

Inspected Item:	Operational	Inoperative
Aerators SCFM/Compressors PSI Record Pressure Reading	2. OPSI	
Filters	✓	
Irrigation Pumps		
Recirculation Pumps	N/A	
Disinfection Device	✓	
Chlorine Supply	✓	
Electrical Circuits	✓	
Distribution System	✓	
Sprayfield Vegetation	✓	
Back Flush Drip Field, if applicable	N/A	
Other as Noted		

2. Action taken or Repairs or Needed repairs to system (list all components replaced):
Pump and alarm test good.
All floats work
Filled. Compressor
Cleaned

SYSTEM OPERATING AS DESIGNED? Y/N

Access Posts are Secured	Yes	No

3. Tests required and results:

	Required		Results	Test
	Yes	No	mg/1 mpn/100mi or Trace	Method
BOD(Grab)				
TSS(Grab)		✓		
Cl(Grab)	✓		0.01	OTO
Fecal Coliform				

Copies of this report have been forwarded to the following: COMAL county / homeowner.

Maintenance Technician: Cayenne

10

Date of completion: 10-7-23 Start Job Time: ✓ Stop Job Time: —

Maintenance Provider: [signature]

COUNTRYSIDE CONSTRUCTION, INC.
300 CHAPMAN PARKWAY
CANYON LAKE, TX 78133

Phone: 830-899-2615
Fax: 830-899-6662

TESTING AND REPORTING RECORD

This Testing and Reporting Record shall be completed, signed and dated after each inspection.

1. Inspection Date: DECEMBER 29,2023 Installed: 10/21/2019 Service Expires:8/29/2024

BILLING ADDRESS:
SYDNIE ENGLISH
6833 CHIMNEY ROCK
CANYON LAKE, TX 78133

Next weekend

PHYSICAL ADDRESS:
6833 CHIMNEY ROCK
CANYON LAKE, TX 78133

TELEPHONE: 530-414-8900
ALT. PHONE:
GATE CODE:
SUBDIVISION: EMERALD VALLEY MFG: TEXAIR-600

LOT: LT

PERMIT#: 109637
COUNTY: COMAL
SN:
MAPSCO: N/A

NOTES:
TYPE OF SYSTEM: SPRAY

Inspected Item:	Operational	Inoperative
Aerators SCFM/Compressors PSI Record Pressure Reading	2.1 PSI	
Filters	✓	
Irrigation Pumps		
Recirculation Pumps	N/A	
Disinfection Device	✓	
Chlorine Supply	✓	
Electrical Circuits	✓	
Distribution System	✓	
Sprayfield Vegetation	✓	
Back Flush Drip Field, if applicable	N/A	
Other as Noted		

2. Action taken or Repairs or Needed repairs to system (list all components replaced):
pump and alarm test good. All floats work, sprayers work good. liquid chlorine low. Compressor filter cleaned

SYSTEM OPERATING AS DESIGNED? Y/N

Access Posts are Secured Yes No

3. Tests required and results:

	Required		Results	Test
	Yes	No	mg/l mpn/100mi or Trace	Method
BOD(Grab)				
TSS(Grab)		✓		
Cl(Grab)	✓		0.01	OTO
Fecal Coliform				

Copies of this report have been forwarded to the following: COMAL county / homeowner.

Maintenance Technician: Cayenne

10

Date of completion: 12-30-23 Start Job Time: — Stop Job Time: —

Maintenance Provider: Walker Chapman